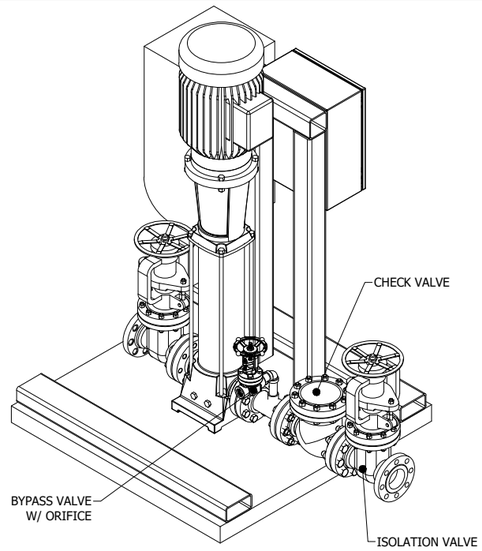


ISO FRONT LEFT
(DISCHARGE SIDE)

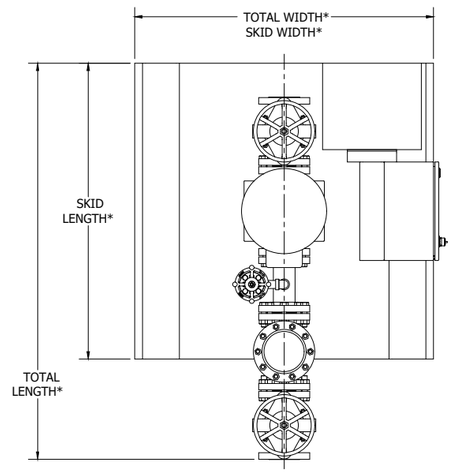


TOP

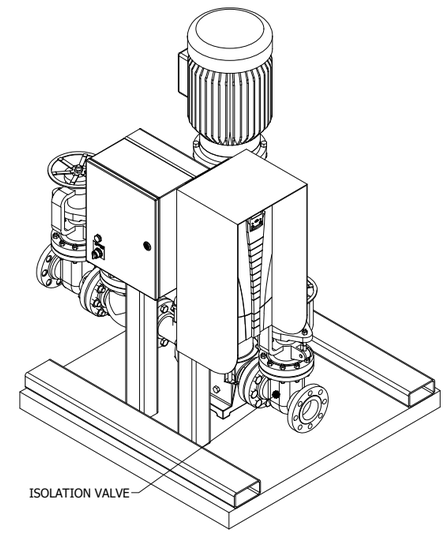


ISO BACK RIGHT
(SUCTION SIDE)

## BOOSTER PUMP SKID DATA TABLE

| | |
|---|---|
| **DESIGN DATA:** | |
| PUMP MANUFACTURER | GRUNDFOS |
| MODEL # | CR5-16 K-FGJ-A-E-HQQE |
| ITEM # | 99968284 |
| RATED PUMP SPEED | 3461 RPM |
| RATED FLOW | 30.4 US GPM |
| RATED HEAD | 392.7 FT |
| SUCTION PORT SIZE | 1-1/4" |
| DISCHARGE PORT SIZE | 1-1/4" |
| **ELECTRICAL DATA:** | |
| 230 / 460 VOLTS \| 60 HERTZ \| 3 PHASE | |
| MOTOR STANDARD | NEMA |
| MOTOR TYPE | WEG |
| RATED POWER | 7.5 HP |
| **INSTALLATION** | |
| SKID MOUNTED SERVICE. | |
| **3D MODEL LINK:** | |
| https://skfb.ly/pvN9R - CLICK HERE | |

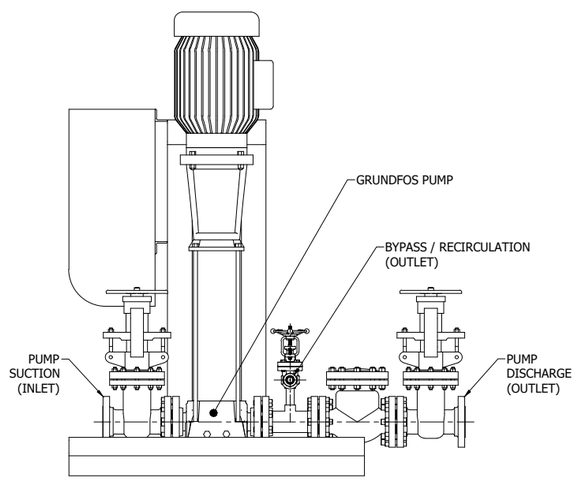


LEFT

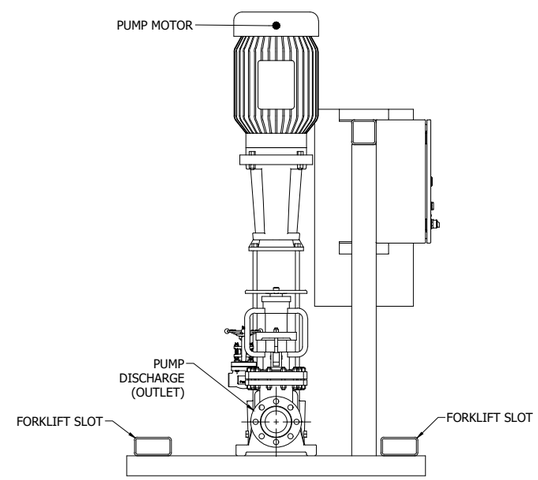


FRONT

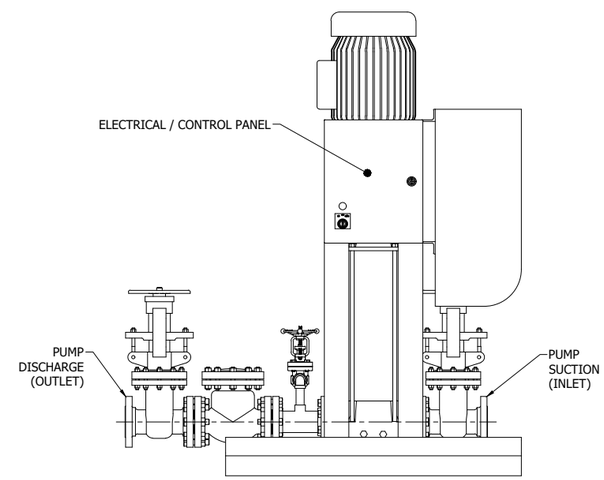


RIGHT

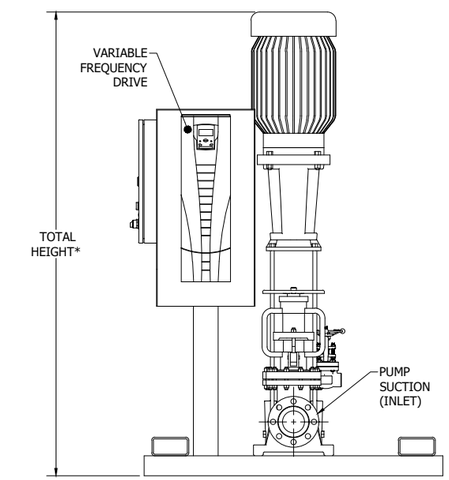


BACK

GENERAL NOTES:
- TYPICAL LAYOUT OF GRUNDFOS BOOSTER PUMP SKIDS.
- DIMENSIONS WITH AN ASTERISK (*) ARE VARIABLE DIMENSIONS.

| REV: | INITIALS: | DATE: | LOCATION(S) IN DRAWING: |
|---|---|---|---|
| 7 | --- | --/--/---- | -:- |
| 6 | --- | --/--/---- | -:- |
| 5 | --- | --/--/---- | -:- |
| 4 | --- | --/--/---- | -:- |
| 3 | --- | --/--/---- | -:- |
| 2 | --- | --/--/---- | -:- |
| 1 | --- | --/--/---- | -:- |

| TASK: | INITIALS: | DATE: |
|---|---|---|
| DRAWN BY: | BC | 04/14/2025 |
| DESIGNED BY: | --- | --/--/---- |
| CHECKED BY: | BG | 04/15/2025 |
| APPROVED BY: | --- | --/--/---- |

CONFIDENTIALITY NOTICE:
THIS DRAWING AND INFORMATION CONTAINED HEREIN ARE THE EXCLUSIVE PROPERTY OF WARE AND SHALL NOT BE REPRODUCED OR REDISTRIBUTED WITHOUT THE WRITTEN CONSENT OF WARE. DRAWING IS FOR REFERENCE ONLY.

| | | | |
|---|---|---|---|
| PROJECT: | BOOSTER PUMP SKID GRUNDFOS | | |
| DWG NAME: | BOOSTER PUMP SKID LAYOUT | | |
| CLIENT: | - | | |
| REV: | 0 | DWG #: | THIRD ANGLE PROJECTION |
| SIZE: | B | BPS_99968284 | |
| SCALE: | NTS | JOB #: | |
| SHEET: | 1/1 | - | |

REFERENCE
www.wareinc.com
1-800-228-8861
CORPORATE OFFICE ADDRESS:
3401 BASHFORD AVE. CT.
LOUISVILLE, KY 40218

WARE
ALL WAYS STEAM