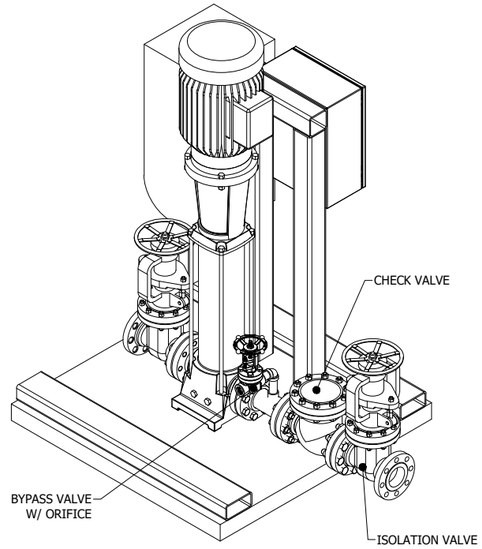

ISO FRONT LEFT
(DISCHARGE SIDE)

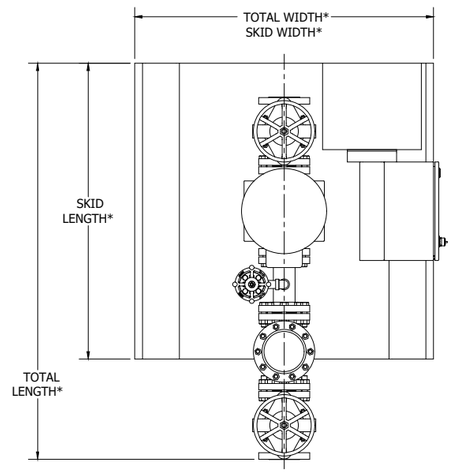

TOP

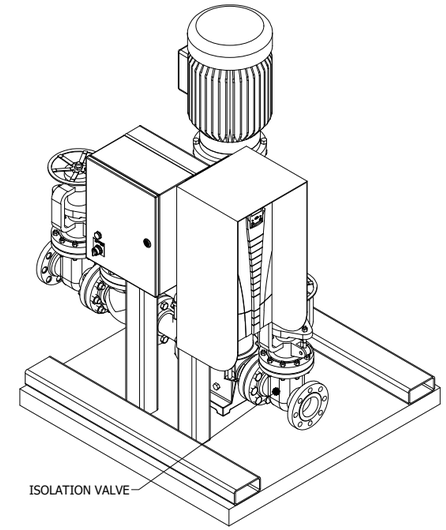

ISO BACK RIGHT
(SUCTION SIDE)

BOOSTER PUMP SKID DATA TABLE

DESIGN DATA:	
PUMP MANUFACTURER	GRUNDFOS
MODEL #	CR15-08 K-GJ-A-E-HQQE
ITEM #	99968307
RATED PUMP SPEED	3509 RPM
RATED FLOW	90.3 US GPM
RATED HEAD	453.4 FT
SUCTION PORT SIZE	2"
DISCHARGE PORT SIZE	2"
ELECTRICAL DATA:	
230 / 460 VOLTS | 60 HERTZ | 3 PHASE	
MOTOR STANDARD	NEMA
MOTOR TYPE	WEG
RATED POWER	20 HP
INSTALLATION	
SKID MOUNTED SERVICE.	
3D MODEL LINK:	
https://skfb.ly/pvN9R - CLICK HERE	

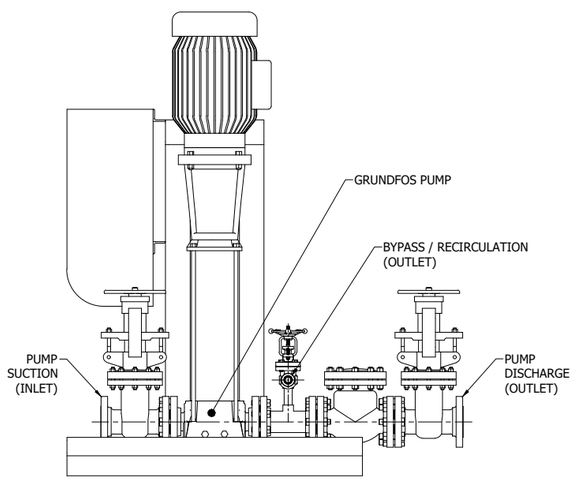

LEFT

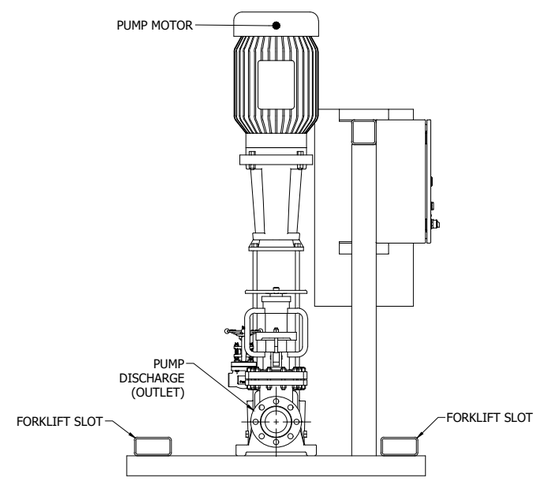

FRONT

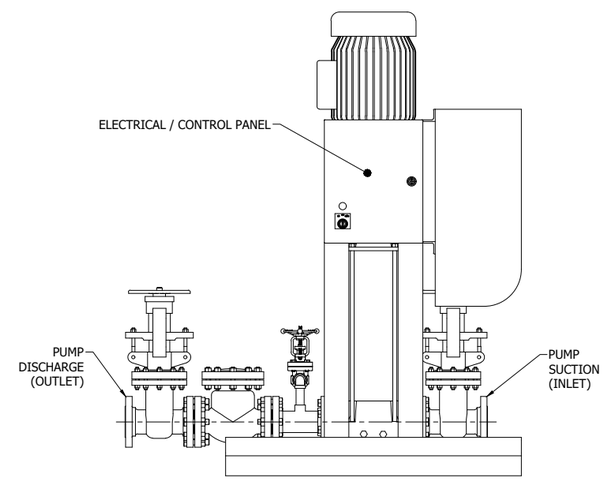

RIGHT

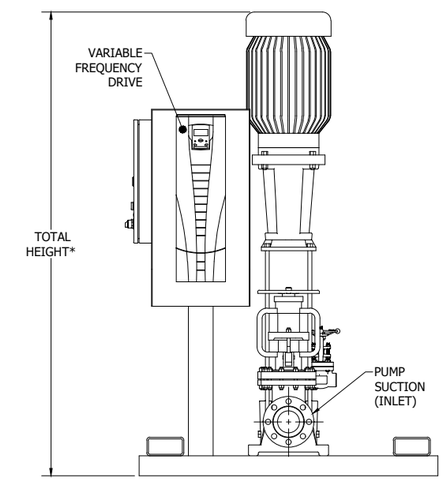

BACK

GENERAL NOTES:
- TYPICAL LAYOUT OF GRUNDFOS BOOSTER PUMP SKIDS.
- DIMENSIONS WITH AN ASTERISK (*) ARE VARIABLE DIMENSIONS.

REV:	INITIALS:	DATE:	LOCATION(S) IN DRAWING:
7	---	--/--/----	-:-
6	---	--/--/----	-:-
5	---	--/--/----	-:-
4	---	--/--/----	-:-
3	---	--/--/----	-:-
2	---	--/--/----	-:-
1	---	--/--/----	-:-

TASK:	INITIALS:	DATE:
DRAWN BY:	BC	04/14/2025
DESIGNED BY:	---	--/--/----
CHECKED BY:	BG	04/15/2025
APPROVED BY:	---	--/--/----

CONFIDENTIALITY NOTICE:
THIS DRAWING AND INFORMATION CONTAINED HEREIN ARE THE EXCLUSIVE PROPERTY OF WARE AND SHALL NOT BE REPRODUCED OR REDISTRIBUTED WITHOUT THE WRITTEN CONSENT OF WARE. DRAWING IS FOR REFERENCE ONLY.

PROJECT:	BOOSTER PUMP SKID GRUNDFOS		
DWG NAME:	BOOSTER PUMP SKID LAYOUT		
CLIENT:	-		
REV:	0	DWG #:	THIRD ANGLE PROJECTION
SIZE:	B	BPS_99968307	
SCALE:	NTS	JOB #:	
SHEET:	1/1	-	

REFERENCE
www.wareinc.com
1-800-228-8861
CORPORATE OFFICE ADDRESS:
3401 BASHFORD AVE. CT.
LOUISVILLE, KY 40218

WARE
ALL WAYS STEAM